This article is reprinted from the TRANSACTIONS of the ASAE (Vol. 32, No. 6, pp. 2041-2045, 1989)
Published by the American Society of Agricultural Engineers, St. Joseph, MI 49085-9659 USA

Performance of a Windblown-Particle Sampler

J. E. Stout, D. W. Fryrear
MEMBER
ASAE

ABSTRACT

A sampler was developed to trap windblown particles for a wind erosion field study, and an experimental investigation was undertaken to determine its performance characteristics. A laboratory wind tunnel was employed to ascertain whether the sampler was sampling isokinetically, efficiently, and nonselectively. Experiments have demonstrated that in order for there to be proper flow into the sampler there must be proper flow out of the sampler. This not only requires a vent to exhaust the air but also requires the use of the external wind energy to pull the air through the sampler's diffuser. It was found that by adjusting the size of the ventilation screens, located at the rear of the sampler, a variation of the inlet flow could be produced. There appeared to be an optimum ventilation screen size for which the inlet flow was isokinetic. The magnitude of the inlet velocity affected the trapping efficiency of the total mass and the trapping efficiency for a given particle size range.

INTRODUCTION

It is the responsibility of an experimentalist to employ an instrument that faithfully describes the physical quantity of interest, since the experimental results may act as a reference whereby the validity of theories may be judged. In the study of wind erosion, one quantity of fundamental interest is the mass of material transported by the wind. It is the primary function of a particle sampler to capture this material so that it may be studied.

There are three criteria that must be met by a particle sampler before it may be considered accurate. It must sample isokinetically, efficiently, and nonselectively. A sampler is considered isokinetic if the inlet flow is identical to the natural wind that would exist if the sampler were not present. An efficient sampler traps the total mass of material that enters the sampler. A nonselective sampler traps all particle sizes with equal efficiency.

No sampler is capable of completely satisfying all of these desired performance characteristics; therefore, it is necessary to test the sampler to determine its shortcomings. Once the deficiencies are identified, adjustments can be made to improve the performance.

Article was submitted for publication in May 1989; reviewed and approved for publication by the Soil and Water Div. of ASAE in October 1989.

The authors are: J. E. STOUT, Wind Engineer, and D. W. FRYREAR, Research Agricultural Engineer, USDA-Agricultural Research Service, Big Spring Field Station, Big Spring, TX.

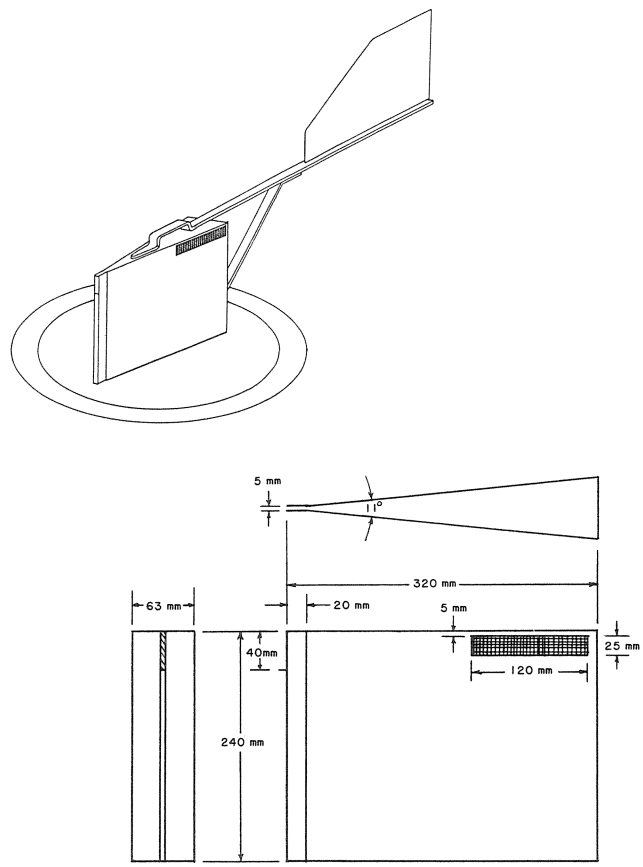

Fig. 1—Drawing of windblown-particle sampler.

This article describes three separate tests which have proven to be effective in establishing the capabilities of a particle sampler. These tests were conducted in the controlled environment of a wind tunnel at the USDA Cropping Systems Research Laboratory, Big Spring, Texas.

SAMPLER DESCRIPTION

The sampler used in the experimental study and shown in Fig. 1 belongs to the class of particle samplers that depend on gravitational settling to trap particles [Bocharov, 1984]. The particle laden air enters a 200 mm tall by 5 mm wide inlet and flows through a 300 mm long passage whose walls slowly expand outward at an angle of 11° to form a diffuser [Patterson, 1938]. The diffuser slows the air moving through the sampler. Any particle moving faster than the surrounding air experiences a drag force that slows its horizontal speed. Simultaneously, the particle falls toward the collection pan located beneath the diffuser. If designed properly,

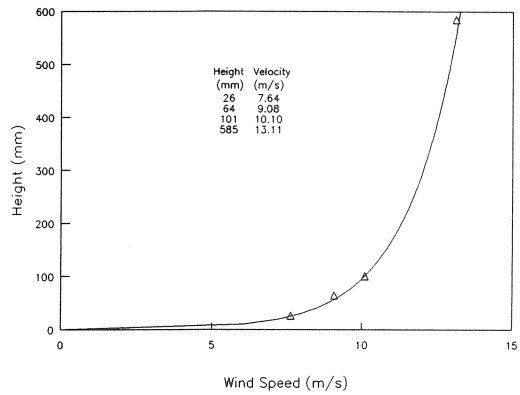

Fig. 2—Velocity profile in the wind tunnel.

the particle will settle out before reaching the end of the diffuser.

Located at the upper rear are two ventilation screens of 4.72 mesh/mm plain weave wire cloth with 30.7% porosity and a 117 μm clear opening between wires. The screens allow the air to exit and also maintain an interface between the internal and external airflow. The faster moving external airflow produces a pressure drop across the ventilation screens that pulls air through the sampler. Therefore, the external flow acts as an energy source that may be tapped by the sampler to overcome the internal friction losses within the diffuser.

WIND TUNNEL EXPERIMENTS

An open circuit, suction-type wind tunnel was employed to provide a steady but turbulent airstream. The test section of the tunnel was 1.0 m tall by 0.5 m wide. The boundary layer within the wind tunnel was adjusted to simulate, as close as possible, the flow across a flat, sandy field by placing wooden roughness elements upstream of the test section. The aerodynamic roughness within the tunnel was 0.35 mm compared to 0.55 mm in the field. The wind velocity profile at the position of the sampler is shown in Fig. 2. This profile was held constant for all the tests unless otherwise specified.

The sampler was mounted in the tunnel so that the bottom of the inlet was set flush with the wind tunnel floor. Attached to the bottom of the sampler was an airtight funnel and glass jar arrangement that extended from the bottom of the tunnel. The particles trapped by the sampler would fall into the funnel and glass jar whose lid was soldered to the bottom of the funnel. The jar could be unscrewed to allow easy access to the trapped sample.

The sampler was designed with a screen area of 25 mm by 120 mm on each side for a total of 6 000 mm². This screen area could be reduced when necessary by applying strips of tape across the portions that needed to be closed.

A small Pitot probe of 1.5 mm outside diameter was mounted within the 5-mm wide sampler entrance at a height of 100 mm to measure the inlet airspeed. A reference probe was mounted at the same height but 50 mm in front and 100 mm to the side of the sampler to provide the undisturbed reference velocity.

A medium sandy soil taken from local agricultural land near Big Spring, Texas was used as the test soil. The particle size distribution of this soil is shown in Table 1. The density of the individual soil particles was 2 650 kg/m³.

TABLE 1. Particle size distribution of the test soil

size range μm	% of mass within size range
>500	0.2 ± 0.1
500-250	34.3 ± 2.8
250-125	31.3 ± 1.0
125-90	10.6 ± 0.6
90-63	9.6 ± 1.0
63-45	10.4 ± 1.3
<45	3.6 ± 0.4

TABLE 2. The measured inlet velocity ratio as a function of the screen and vent area

Screen Area (mm²)	Vent Area (mm²)	γ	$\frac{u_i}{u_r}$
0	0	0.00	0.22
1200	368	0.37	0.56
3600	1105	1.11	0.91
4800	1474	1.47	1.01
6000	1842	1.84	1.09

RESULTS AND DISCUSSION

Inlet Velocity Tests

As mentioned previously, the wind velocity was measured simultaneously at the center of the sampler inlet and off to one side of the sampler for a reference. Let the inlet and reference velocities be denoted u_i and u_r, respectively. For this set of tests, u_r was held constant at 10.1 m/s. The results, compiled in Table 2, show the relationship between the inlet velocity ratio, u_i/u_r, and the screen or vent area. The screen area is the total open area at the rear of the sampler that is covered with screen. The vent area is the screen area multiplied by the porosity. The quantity, γ, is the ratio of the vent area to the sampler inlet area of 1 000 mm².

The vent appears to function as a valve that controls the flow of air through the sampler. As revealed in Fig. 3, the inlet velocity ratio rose sharply at first, but the slope

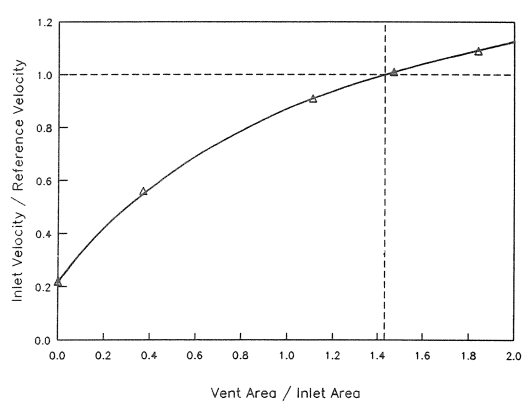

Fig. 3—Effect of changing the size of the ventilation screens on the inlet velocity ratio for u_r = 10.1 m/s.

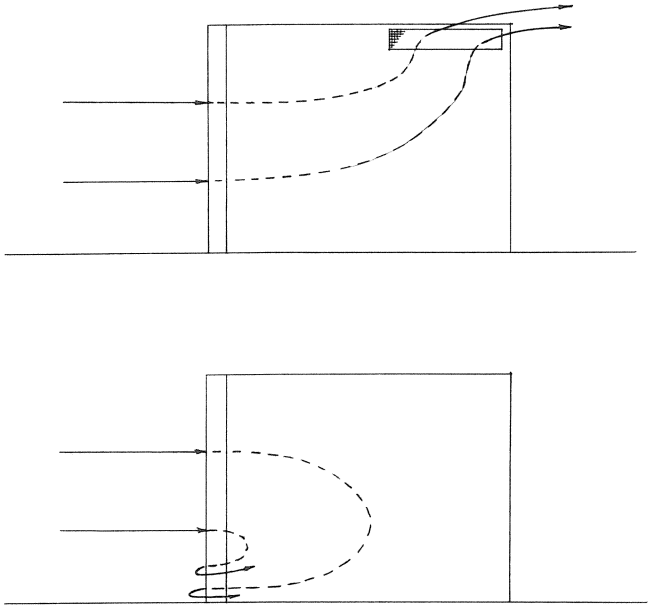

Fig. 4—Schematic of flow through the sampler with and without ventilation.

decreased with additional amounts of vent area. This is a favorable trend since, in the vicinity of $u_i/u_r \cong 1$, small vent area errors will not produce large inlet velocity errors. For example, at $\gamma = 1.84$ the inlet velocity was only 9% too high, whereas the vent area was 29% too high.

The dashed line in Fig. 3 indicates that the desired isokinetic condition was achieved at a vent to inlet area ratio of 1.43, which corresponds to a total screen area of 4 650 mm^2.

With the ventilation screens completely closed, we initially assumed that the inlet velocity would be zero, but a small velocity was recorded. This nonzero value was due to a circulation such as that shown in Fig. 4. This circulation was directly related to the shear flow within the boundary layer. The shear flow delivers larger velocities at the top of the inlet than at the surface. As the flow decelerates within the sampler, a vertical pressure gradient develops that drives the circulatory flow. A similar circulation occurs at the entrance of Pitot tubes placed within a shear flow [Thwaites, 1960]. Jones and Willetts (1979) photographed a scour form in the sand in front of their sampler inlet that was formed by this type of circulation. The outward flow at the bottom of the inlet was confirmed experimentally by employing smoke. This outward flow plays a major role in reducing the trapping efficiency of unventilated samplers. Samplers mounted well above the shear zone will not experience this type of circulatory flow. More importantly, properly ventilated samplers will not exhibit this type of circulation.

Effect of Wind Speed Changes

In the real world, the wind speed varies constantly; therefore, the inlet velocity must follow these changes. A wind tunnel experiment was devised to determine whether the sampler remained isokinetic as the wind speed varied. The screen area was held constant at 4 650 mm^2 and the inlet velocity was recorded with a reference

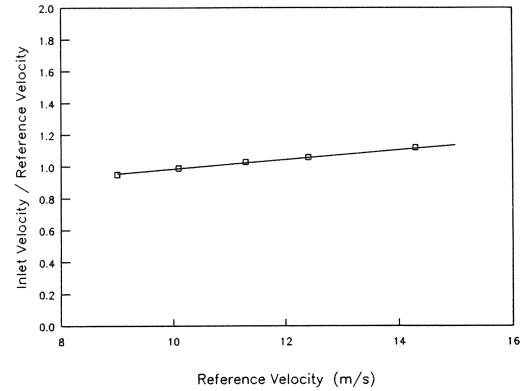

Fig. 5—Inlet velocity ratio as a function of the reference velocity for a fixed screen area.

wind speed of 9.0, 10.1, 11.3, 12.4, and 14.3 m/s.

The results, plotted in Fig. 5, show the relationship between the reference wind speed and inlet velocity ratio. The relationship appears to be linear, and the slope, which indicates sensitivity, is quite small. Unfortunately, the slope is not zero; therefore, the goal of a natural control system that adjusts the flow to match exactly the wind speed was not fully realized. Nevertheless, fairly large free stream velocity changes cause only minor inlet velocity errors. Perhaps, the vent area would need to vary with the wind speed to further increase accuracy. The best alternative is to design the sampler for the wind speed normally associated with a wind erosion event and thereby minimize the possible error.

Trapping Efficiency Tests

To measure the relationship between the total mass of material trapped by the sampler and the inlet flow velocity, the following experiment was performed. A uniform strip of sandy soil was placed across the width of the wind tunnel on a thin 50 mm high platform at a distance of 700 mm upwind of the sampler. The mass of soil/unit-length of the strip was multiplied by the width of the sampler inlet to estimate the mass of soil that was predicted to be trapped by a perfectly efficient sampler, m_p. In most cases $m_p \cong 3$ g. The wind tunnel was then turned on until the soil was completely blown off the platform. The surface between the platform and the sampler inlet was constructed of smooth sheet metal to avoid any possible trapping of the test soil by the surface. The mass of soil actually trapped by the sampler, m_t, was divided by the predicted value, m_p, to determine the trapping efficiency.

The results, compiled in Table 3, show that there is a direct and measurable relationship between the inlet

TABLE 3. Trapping efficiency as a function of inlet velocity ratio

$\frac{u_i}{u_r}$	Trapping Efficiency (%)
0.22	72 ± 1
0.56	85 ± 4
0.91	96 ± 1
1.01	99 ± 3
1.09	101 ± 2

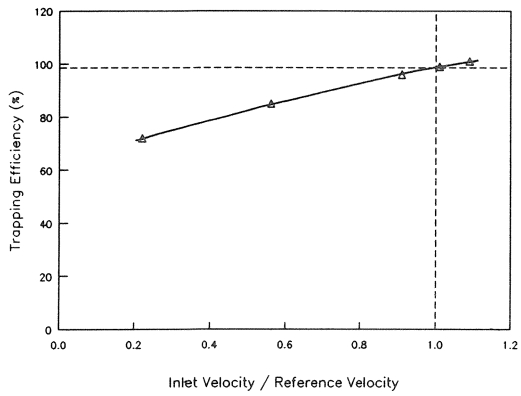

Fig. 6—Trapping efficiency as a function of inlet velocity ratio.

velocity ratio and the trapping efficiency. Each value represents the average of three separate tests plus or minus the maximum variation.

The dashed line in Fig. 6 reveals that at the isokinetic flow condition the trapping efficiency was 98.5%, which indiciates that although the flow rate of air and particles into the sampler was correct, a small number of particles passed completely through the sampler. Based on the size of the clear opening between the wires of the ventilation screen, we estimate that the particles must have been smaller than 117 μm. As will be shown in the next section, the small percentage that escaped consisted primarily of particles smaller than 63 μm. The trapping efficiency error was quite small for this test soil since the fraction of particles less than 63 μm amounted to only 14% of the total mass of the original soil sample, and not all of this fraction escaped from the sampler. The error could be more substantial for a soil type with a larger percentage of fines. In this case, it may be necessary to extend the diffuser length to allow more time for the particles to settle out. Another solution would be t decrease the height of the inlet opening and thereby reduce the maximum distance of fall to the collection pan.

With the ventilation screens closed ($u_i/u_r = 0.22$), much of the air was diverted around the sampler inlet, and this reduced the trapping efficiency to 72%. In a similar experiment, Jones and Willetts (1979) measured a 50% reduction in efficiency. Other unventilated sampler designs, such as those used by Bagnold (1943) and Chepil (1957), may also suffer a reduced trapping efficiency for the same reason.

At an inlet velocity ratio of 1.09, the trapping efficiency was 101%, which indicates that the above optimum inlet flow drew in more particles than would have passed into the sampler isokinetically.

Selectivity Tests

To measure the selectivity of a sampler, one must determine the efficiency of trapping for a given particle size range. The trapped samples collected in the previous test were sieved to determine the mass of material within a given size range. The mass of material within a given size range that would have been trapped by a perfect sampler was calculated by multiplying the total mass m_p by the particle size distribution shown in Table 1. The ratio of the trapped mass within a given size range to the predicted mass within the same size range determined the trapping efficiency for that size range. The results for various inlet velocity ratios are shown in Table 4.

TABLE 4. The trapping efficiency for various particle size ranges as a function of inlet velocity ratio

sieve sizes (μm)	trapping efficiency for size range (%)				
u_i/u_r	= 0.22	0.56	0.91	1.01	1.09
>500	–	–	–	–	–
500-250	98	105	102	100	111
250-125	99	102	104	107	109
125-90	64	86	96	101	96
90-63	16	63	96	112	106
63-45	4	26	63	76	66
<45	1	2	11	13	11

The vertical columns of Table 4 show the variation of the trapping efficiency as a function of the size range. Despite a few spurious values that seem out of line, the general trend shows that the sampler trapped the larger particles with much higher efficiency than the smaller particles. This trend is evident at all inlet velocity ratios. Therefore, this sampler in its present form would be more accurate sampling flows that consist primarily of large grains moving in saltation rather than suspension-size grains. This is probably true of most gravitational samplers since they depend on the fall velocity of the particles for trapping.

The horizontal rows of Table 4 show the variation of the size specific trapping efficiency as a function of the inlet velocity ratio. Most values show a maximum within the range $0.91<u_i/u_r<1.09$ which proves the value of sampling isokinetically. The worst efficiency was obtained at $u_i/u_r = 0.22$, which corresponds to the unventilated sampler. Thus, we may conclude that unventilated samplers cannot provide an accurate measure of the particle size distribution of the windblown material and a properly ventilated sampler will provide the best possible measure of the particle size distribution, although it may not be perfect.

CONCLUSIONS

This study has demonstrated that the controlled conditions of a wind tunnel allow a precise determination of the degree to which a sampler operates isokinetically, efficiently, and nonselectively. The quantitative description of these performance characteristics has revealed the capabilities and the limitations of this type of sampler and has suggested modifications for an improved design.

For this type of sampler design, the following performance characteristics were determined.

1. There was a direct and measurable relationship between the amount of ventilation screen and the inlet flow velocity. It has been shown that there exists an optimum choice of ventilation screen size that will produce an isokinetic sampler. For this sampler, the inlet flow was isokinetic when the vent to inlet area ratio, γ, was 1.43. Addition or reduction of vent area from this optimum value caused the inlet velocity to be higher or lower than the natural airstream, respectively. With a fixed screen area, modest deviations from isokinetic flow

were observed when the free stream velocity was changed.

2. There was a significant change in the trapping efficiency when sampling above or below isokinetic conditions. The trapping efficiency was 72% when the sampler had no ventilation and was 98.5% efficient at the isokinetic condition.
3. The trapping efficiency for the smaller particle size ranges showed a maximum while sampling isokinetically. The larger particles were less affected by inlet velocity errors. It was concluded that the best possible measure of the particle size distribution of windblown sediment was provided by an isokinetic sampler.

References

1. Bagnold, R.A. 1943. *The Physics of Blown Sand and Desert Dunes.* New York: William Morrow & Co.
2. Bocharov, A.P. 1984. *A Description of Devices Used in the Study of Wind Erosion of Soils.* New Delhi: Amerind Publishing Co. Pvt. Ltd.
3. Chepil, W.S. 1957. Width of field strips to control wind erosion. Kansas Agric. Exp. Sta. Tech. Bull. 92.
4. Jones, J.R. and B.B. Willetts. 1979. Errors in measuring uniform aeolian sand flow by means of an adjustable trap. *Sedimentology* 26:463-468.
5. Patterson, G.N. 1938. Modern diffuser design. *Aircraft Engineering* (September) 267-273.
6. Thwaites, B. 1960. *Incompressible Aerodynamics.* New York: Dover Publications, Inc.

"PURCHASED BY THE U. S. DEPARTMENT OF AGRICULTURE FOR OFFICIAL USE"